FABORY

Fabory Die DIN 40434 HSS-G PG 21

Article number	U1107.000.021
Brand	-
UBB	240203294139
UNSPSC	27110000
EAN	
PKG. of 1	Full Box Only

Technical Parameters

Model	Thread cutting die
Outer diameter	65
Height	18
Thread type	Pg
Number of teeth per inch	16
Cutting material	Other
Thread size (inch)	Other

Standards

Technical Specification
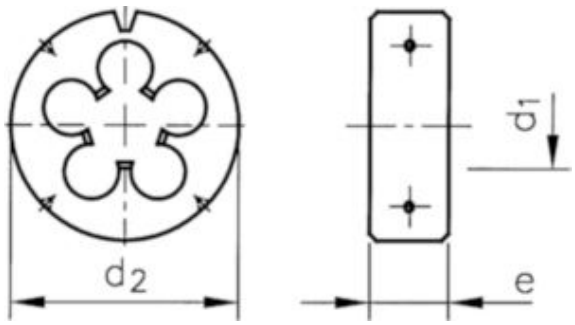
Technical Drawing