FABORY

Heavy hexagon nut ASME ≈B18.2.4.6M Steel ASTM A194M Hot dip galvanized Gr.7 oversized M30

Article number	22378.300.001
Brand	-
UBB	500635542946
UNSPSC	31161727
EAN	8715492922939
PKG. of 1	Full Box Only

Technical Parameters

Diameter	M30
Class	Gr.7
Material	Steel
Material technical	ASTM A194M
Thread direction	Right
Surface treatment	Hot dip galvanized
Thread	Metric thread
Info	WAF deviate from ASME B18.2.4.6M and are in accordance with DIN 934. Depending on availability, nuts may be supplied with the larger WAF to ASME B18.2.4.6M.oversized

Standards

ASME	≈B18.2.4.6M
ASTM	A194M

Technical Specification

d-D	M30
F	46
H	30
P	3.5
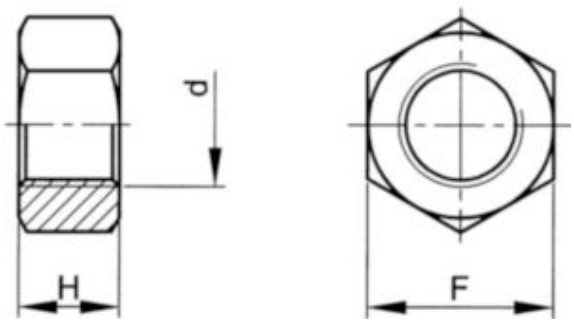
Technical Drawing