FABORY

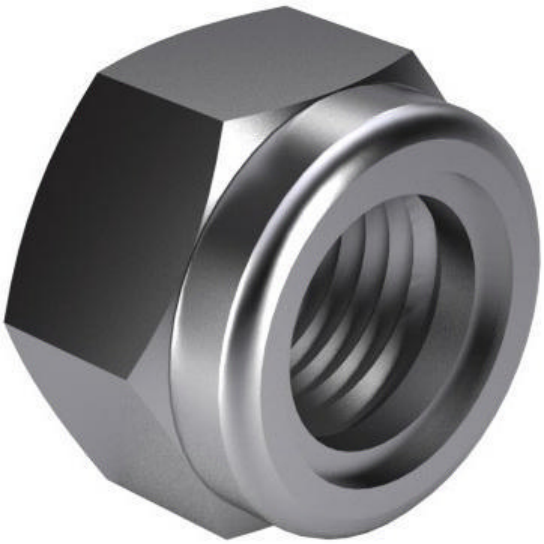

Prevailing torque type hexagon nut with plastic insert, high type ISO 7040 Steel Zinc plated 8 M12

Article number	12510.120.001
Brand	-
UBB	500650979205
UNSPSC	31162400
EAN	8717077312456
PKG. of 100	Full Box Only

Technical Parameters

Diameter	M12
Class	8
Driving features	Hexagon
Material	Steel
Thread direction	Right
Surface treatment	Zinc plated
Thread	Metric thread

Standards

DIN	6924
ISO	7040

Technical Specification

d-D	M12
h (max.)	14.9
P	1.75
s	18
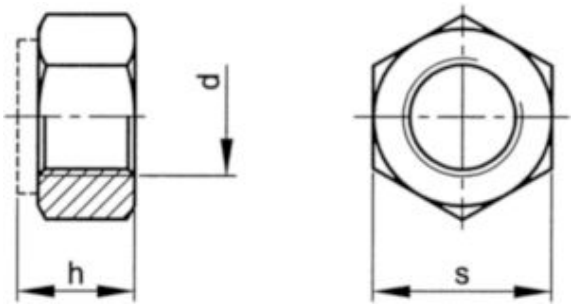
Technical Drawing